A	C	P	REV	DATE	BY	ECN #	REV	DATE	BY	ECN #	REV	DATE	BY	ECN #
X	-	-	A	4/16/01	PH	DR & REL.	B	5/14/01	PH	01-0150				

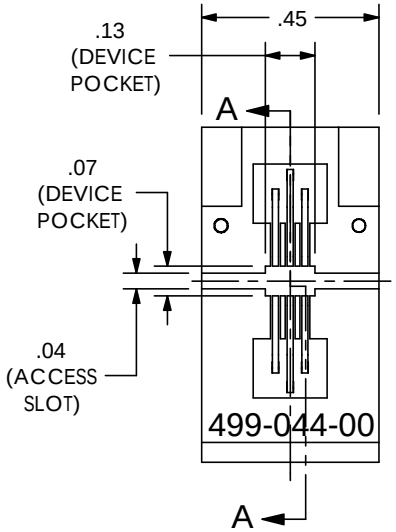

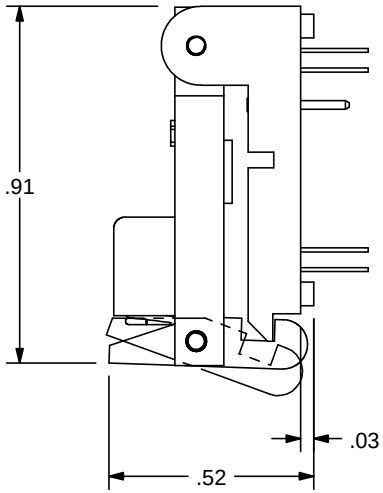

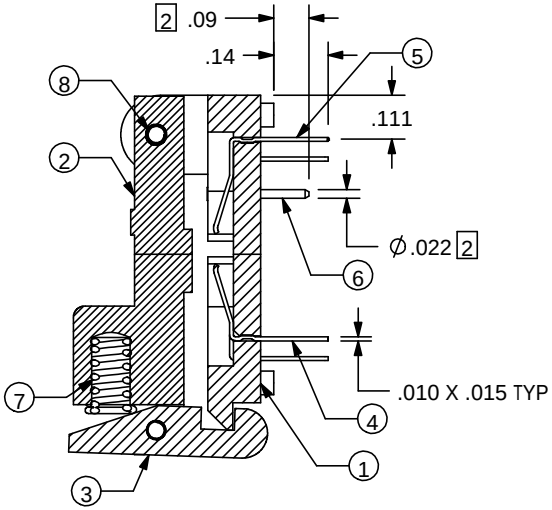

SECTION A-A

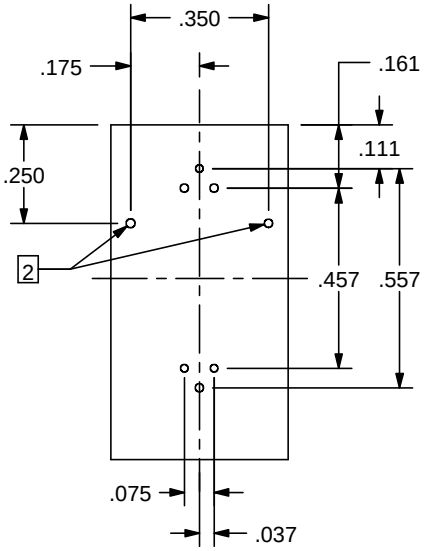

FOOTPRINT

FOOTPRINT SHOWN LOOKING DOWN THRU SOCKET

ITEM	PART NUMBER	QTY.	DESCRIPTION
8	099-060-10	2	SPIRAL PIN
7	005-017-00	1	SPRING
6	003-031-00	2	CONTACT PIN
5	002-068-12	2	CONTACT
4	002-053-02	4	CONTACT
3	001-338-00	1	LATCH
2	001-337-23	1	LID
1	001-336-60	1	BASE

2 HOLES FOR MIL-MAX CONTACT PIN.

1. MATERIAL & FINISH:
   BODY, LID, LATCH - PPS, AS MOLDED
   CONTACTS - PFINODAL, Au PLATING

LEGEND
◇ CRITICAL
0 TOTAL NO. OF ◇ USED

SIZE B

PROJECTION

THIS DOCUMENT CONTAINS PROPRIETARY INFORMATION THAT IS THE SOLE PROPERTY OF WELLS-CTI. THIS INFORMATION IS TO BE HELD BY ITS RECIPENT ON A CONFIDENTAL BASIS , AND IS NOT TO BE DISCLOSED TO OTHERS OR USED WITHOUT WRITTEN CONSENT OF WELLS-CTI.

DO NOT SCALE

MATERIAL / FINISH: 1

REFERENCE: -

PROJECT / SERIES: 499

TOLERANCES
X.X ± 0.1
X.XX ± 0.01
X.XXX ± 0.005
ANGLE ± 1°

DRAWN	PH	DATE 4/11/01
CHECKED	EP	DATE 4/16/01
ENGINEER	PH	DATE 4/11/01
ENG. SUPRV.	EP	DATE 4/16/01
MFG. ENGR.	AG	DATE 4/18/01

WELLS-CTI PHOENIX ARIZONA USA
A subsidiary of PCD inc.

PART NAME: SOCKET ASSEMBLY (SOT-23) 6 LEAD

PART NUMBER: 499-P44-10 REV. B

SCALE 3:1 UNITS: in [mm]

CAD NUMBER: 499-P44-10.SLDDRW

SHEET 1 OF 1